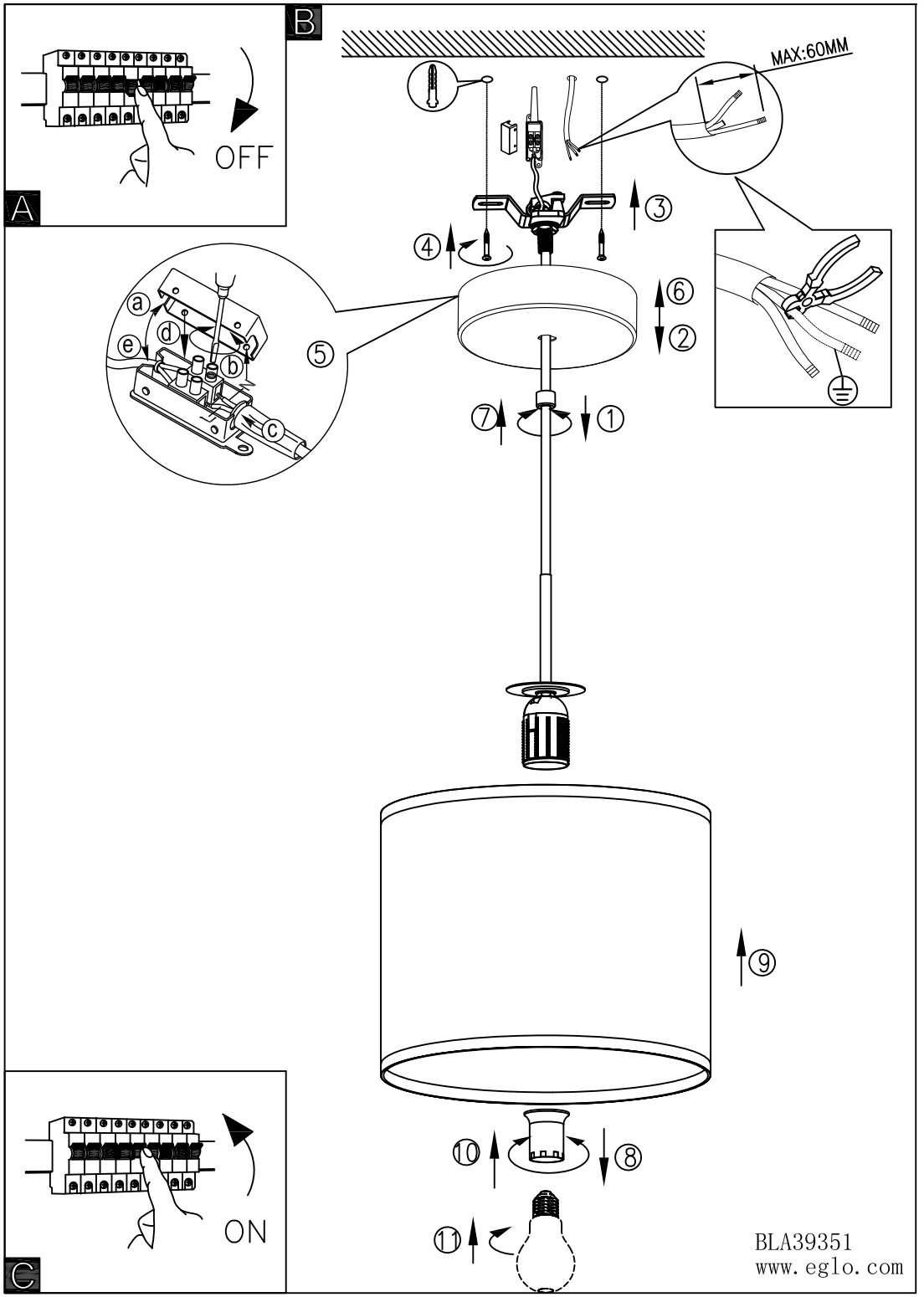
A
OFF
B
MAX:60MM
③
④
⑥
②
⑤
a
b
c
d
e
⑦
①
⑨
⑩
⑧
⑪
C
ON
BLA39351
www.eglo.com