searchlight

ASSEMBLY INSTRUCTIONS

IP44

7039-23/7039-28

QL 00287

CE

A

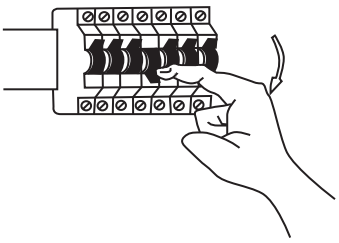

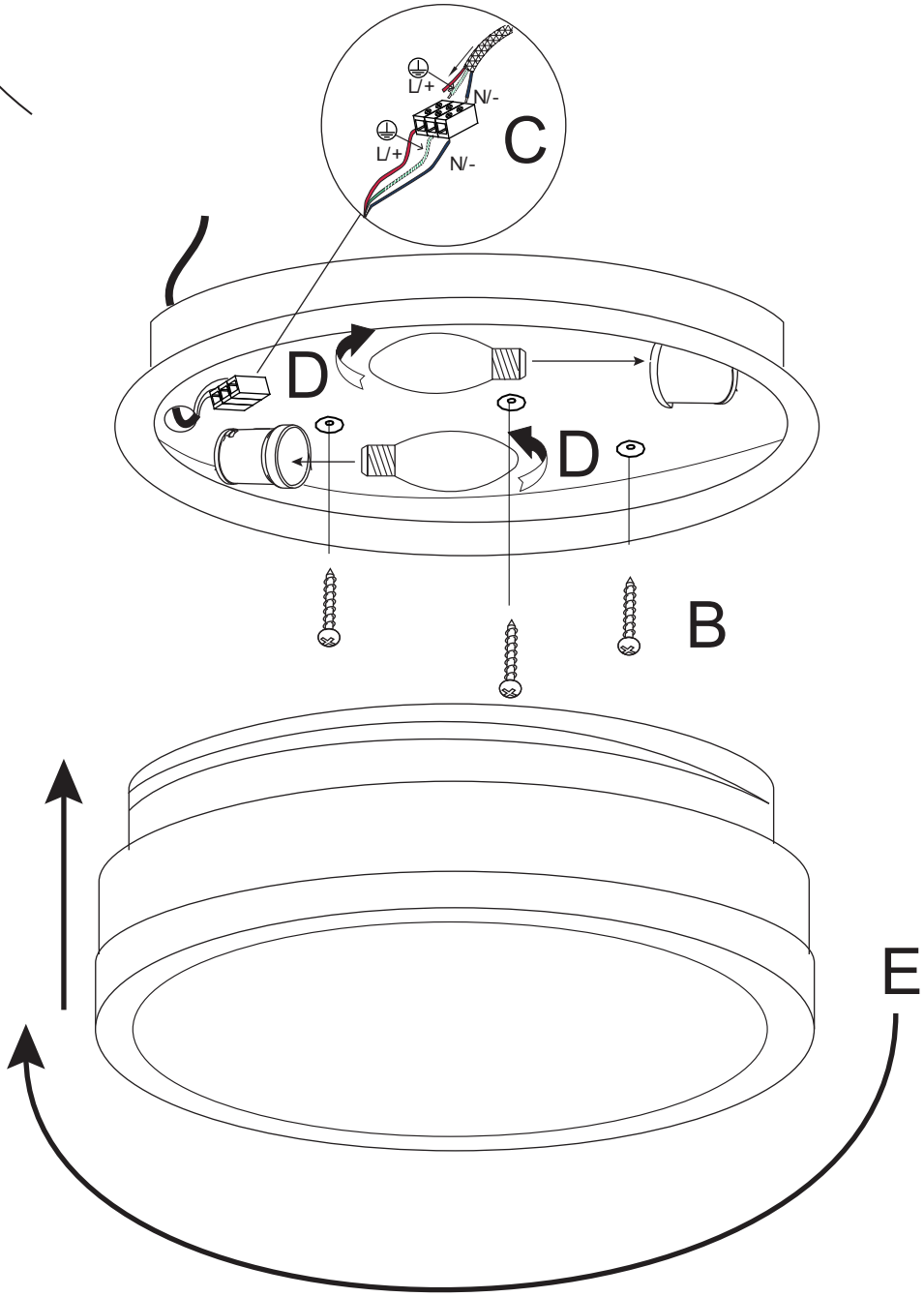

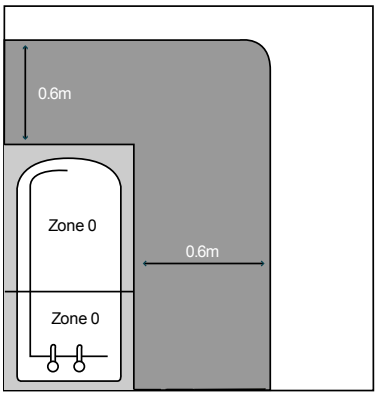

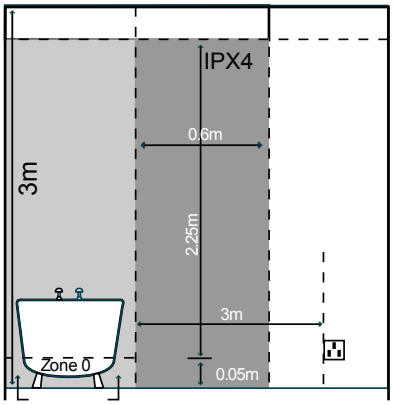

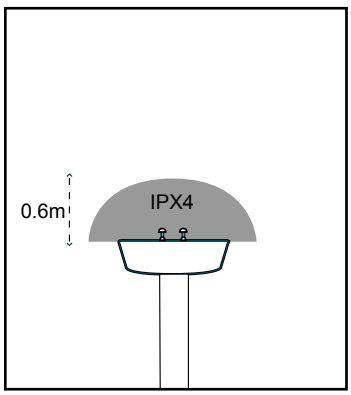

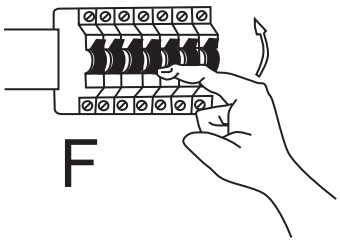

F